A

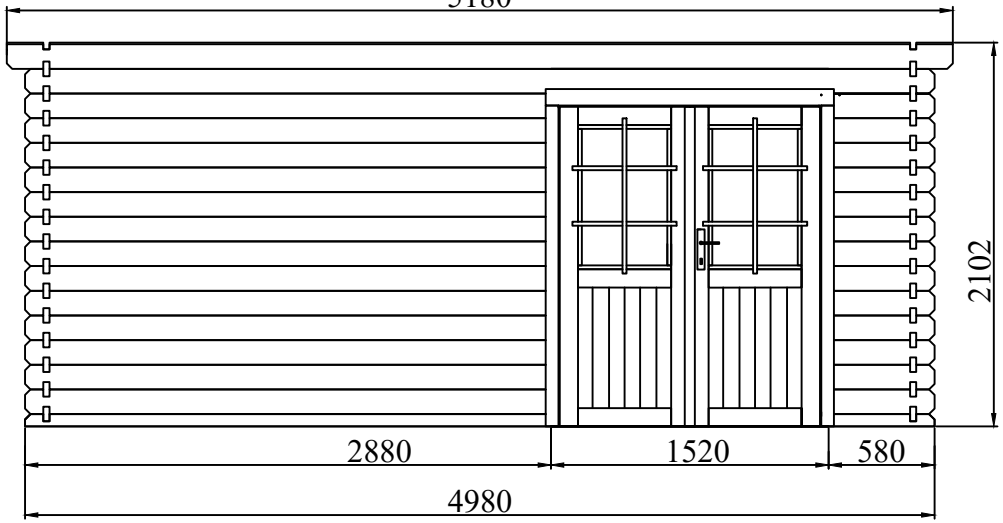
5180
2102
2880
1520
580
4980

B

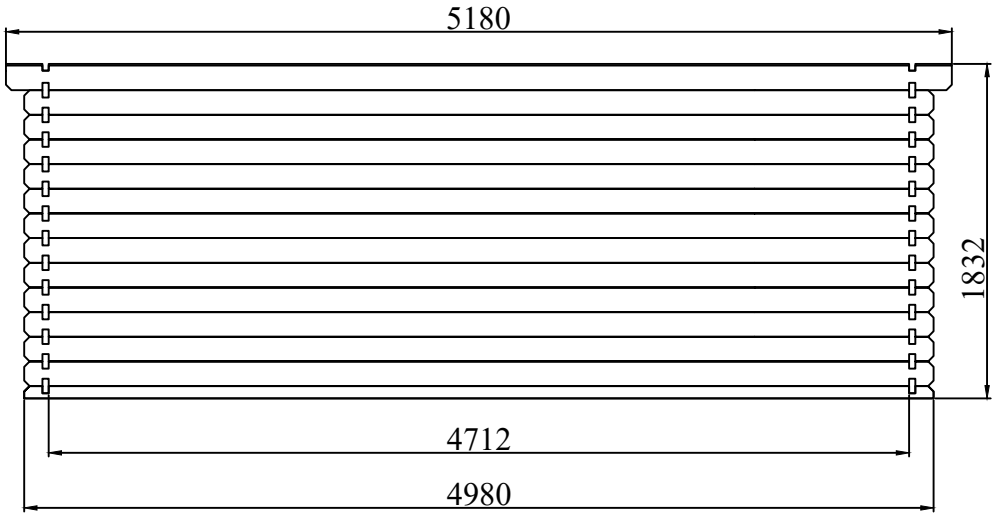
5180
1832
4712
4980

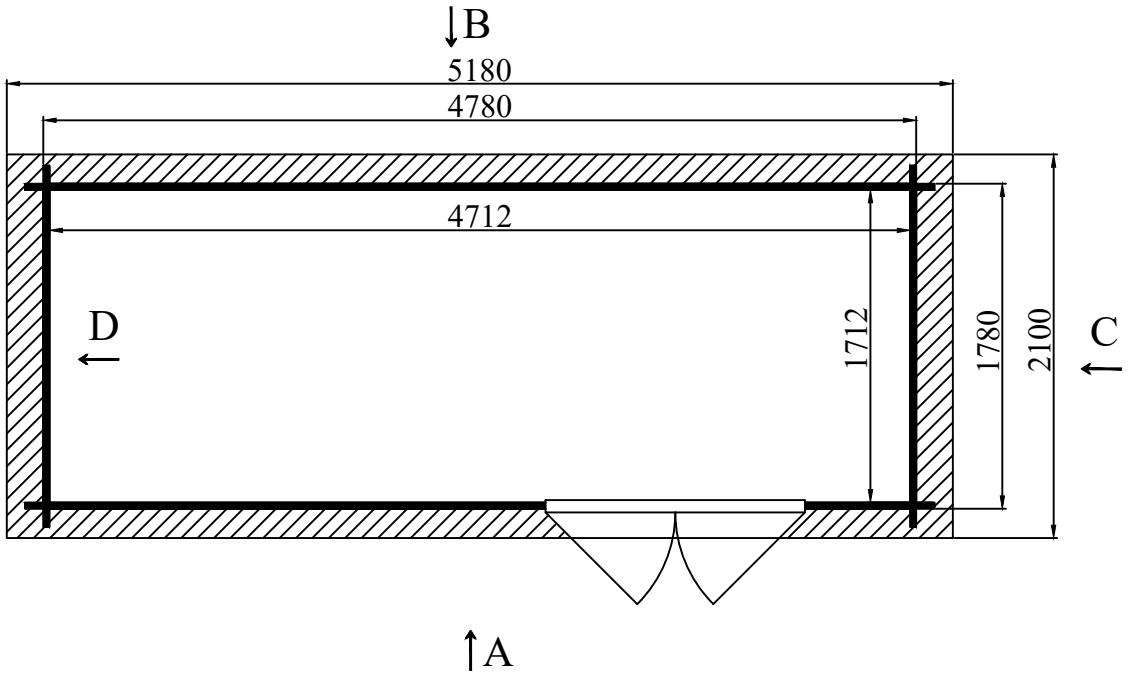
B
5180
4780
4712
D
1712
1780
2100
C
A

C, D

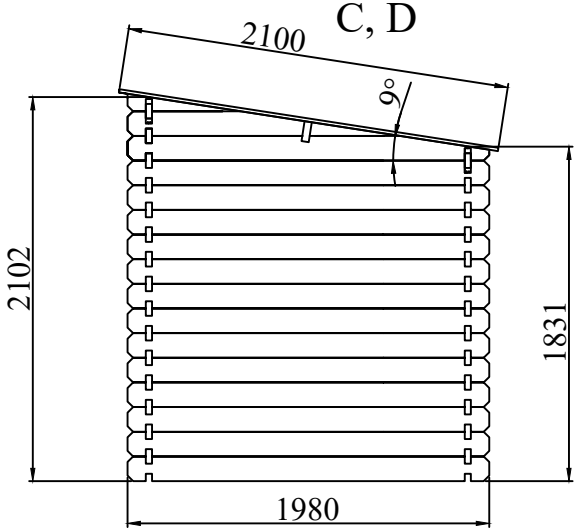
2100
9°
2102
1831
1980